Work Order ID 61344

Wednesday, August 18, 2010 4:09:53 PM

Item ID: D350-748-141TRN
Revision ID:
Item Name: Crosstube Turning Detail
Start Date: 8/19/2010 **Start Qty:** 1.00
Required Date: 9/2/2010 **Req'd Qty:** 1.00
Reference:

Accept

Setup Start
Stop

Cust Item ID:
Customer:

Run Start
Stop

Approvals: **Process Plan:** mf **Date:** 10-8-18 **Tooling:** _____ **Date:** _____
QC: _____ **Date:** _____ **SPC (Y/N):** _____ **Date:** _____

Draw Nbr	Revision Nbr
D350-748-141	Rev E

Sequence ID/ Work Center ID	Operation Description	Set Up/ Run Hours	Tool ID	Tool #	Plan Code	Accept Qty	Reject Qty	Reject Number	Insp. Stamp
100 Mori Seiki Mori Seiki CNC Lathe Large	MORI SEIKI CNC LATHE LARGE **Memo** 1-Fill tube with sand & install plugs on both ends as per Folio FA648 2-Turn first side as per Folio FA648 3- File transition lines smooth.	0.00 0.00				1	Ø		
110 QC Quality Control	QC1- Inspect dimensions to dimension sheet **Memo**	0.00 0.00				1	Ø		
120 Mori Seiki Mori Seiki CNC Lathe Large	MORI SEIKI CNC LATHE LARGE **Memo** 1-Turn second side as per Folio FA648 2-File transition lines smooth. 3-Scribe Part & Batch as per Dwg D350-748-141	0.00 0.00				1	Ø		

Dart Aerospace Ltd

W/O:		WORK ORDER CHANGES					
DATE	STEP	PROCEDURE CHANGE	By	Date	Qty	Approval Chief Eng / Prod Mgr	Approval QC Inspector

Part No: _____ PAR #: _____ Fault Category: _____ NCR: Yes No DQA: _____ Date: _____

Resolution: _____ Disposition: _____ QA: N/C Closed: _____ Date: _____

NCR:		WORK ORDER NON-CONFORMANCE (NCR)						
DATE	STEP	Description of NC Section A	Corrective Action Section B			Verification Section C	Approval Chief Eng	Approval QC Inspector
			Initial Chief Eng	Action Description Chief Eng	Sign & Date			

NOTE: Date & initial all entries

H:\FORMS\Quality Assurance\approved QA\NCRWO RevE

Work Order ID 61344

Wednesday, August 18, 2010 4:09:53 PM

Item ID: D350-748-141TRN

Revision ID:

Item Name: Crosstube Turning Detail

Start Date: 8/19/2010 **Start Qty:** 1.00

Required Date: 9/2/2010 **Req'd Qty:** 1.00

Reference:

Accept

Setup **Start**

Stop

Cust Item ID:

Customer:

Approvals: **Process Plan:** _____ **Date:** _____ **Tooling:** _____ **Date:** _____

QC: _____ **Date:** _____ **SPC (Y/N):** _____ **Date:** _____

Run **Start**

Stop

Sequence ID/ Work Center ID	Operation Description	Set Up/ Run Hours	Tool ID	Tool #	Plan Code	Accept Qty	Reject Qty	Reject Number	Insp. Stamp
130	QC1- Inspect dimensions to dimension sheet	0.00							
QC	Memo	0.00							
Quality Control									
140	QC8- Inspect parts - second check	0.00							
QC	Memo	0.00							
Quality Control									
150		0.00							
Crosstubes	Large Fab								
Crosstubes	Memo Grind machining marks	0.00							

ok 10/08/25

10/08/25

P70

Dart Aerospace Ltd

W/O:		WORK ORDER CHANGES					
DATE	STEP	PROCEDURE CHANGE	By	Date	Qty	Approval Chief Eng / Prod Mgr	Approval QC Inspector

Part No: D350-748-141TRV **PAR #:** CAR10-23 created **Fault Category:** x- tubes. **NCR:** (Yes) No **DQA:** **Date:** 10.12.14

Resolution: Scrap **Disposition:** Scrap **QA: N/C Closed:** **Date:** 10/12/14

NCR: 61344		WORK ORDER NON-CONFORMANCE (NCR)						
DATE	STEP	Description of NC Section A	Corrective Action Section B: Initial Chief Eng	Action Description Chief Eng	Sign & Date	Verification Section C	Approval Chief Eng	Approval QC Inspector
10.10.04	150	large pitt marks were visible through out the center portion of the tube. This area is un-machined pitting is too deep & unacceptable to grind to remove. R.C. material - process	10.10.05	- scrap tube. - Process being revised on CAR10-23 to turn larger O.D material.	10-12-9	SAS 10-12-13	10.10.05	10.10.04

NOTE: Date & initial all entries

H:\FORMS\Quality Assurance\approved QA\NCRWO RevE

Work Order ID 61344

Wednesday, August 18, 2010 4:09:53 PM

Item ID: D350-748-141TRN

Revision ID:

Item Name: Crosstube Turning Detail

Start Date: 8/19/2010 **Start Qty:** 1.00

Required Date: 9/2/2010 **Req'd Qty:** 1.00

Reference:

Accept

Setup Start

Stop

Cust Item ID:

Customer:

Approvals: **Process Plan:** _____ **Date:** _____ **Tooling:** _____ **Date:** _____

QC: _____ **Date:** _____ **SPC (Y/N):** _____ **Date:** _____

Run Start

Stop

Sequence ID/ Work Center ID	Operation Description	Set Up/ Run Hours	Tool ID	Tool #	Plan Code	Accept Qty	Reject Qty	Reject Number	Insp. Stamp
160	Outsource process - Heat Treat	0.00							
Outsource1									
Outsource process - Heat Treat	**Memo**	0.00							
	Issue P/O: _____ Heat Treat to min 180 KSI As per Dwg D350-748-141 (MIL-T-6736 OR AMS 2759-1C) Sand Blast tube after Heat Treat Possibe Supplier: Vac Aero Ensure Certificate of Conformity is attached								
170	Receive & Inspect for Damage & Mat'l Certs	0.00							
Packaging									
Packaging	**Memo**	0.00							
	Ensure certificate of conformaty is attached								
180	QC6- Inspect dimensions to drawing	0.00							
QC									
Quality Control	**Memo**	0.00							

Dart Aerospace Ltd

W/O:		WORK ORDER CHANGES					
DATE	STEP	PROCEDURE CHANGE	By	Date	Qty	Approval Chief Eng / Prod Mgr	Approval QC Inspector

Part No: _____ **PAR #:** _____ **Fault Category:** _____ **NCR:** Yes No **DQA:** _____ **Date:** _____

Resolution: _____ **Disposition:** _____ **QA: N/C Closed:** _____ **Date:** _____

NCR:		WORK ORDER NON-CONFORMANCE (NCR)						
DATE	STEP	Description of NC Section A	Corrective Action Section B			Verification Section C	Approval Chief Eng	Approval QC Inspector
			Initial Chief Eng	Action Description Chief Eng	Sign & Date			

NOTE: Date & initial all entries

Work Order ID 61344

Wednesday, August 18, 2010 4:09:53 PM

Item ID: D350-748-141TRN
Revision ID:
Item Name: Crosstube Turning Detail
Start Date: 8/19/2010 **Start Qty:** 1.00
Required Date: 9/2/2010 **Req'd Qty:** 1.00
Reference:

Accept

Setup **Start**
Stop

Cust Item ID:
Customer:

Approvals: **Process Plan:** _____ **Date:** _____ **Tooling:** _____ **Date:** _____
QC: _____ **Date:** _____ **SPC (Y/N):** _____ **Date:** _____

Run **Start**
Stop

Sequence ID/ Work Center ID	Operation Description	Set Up/ Run Hours	Tool ID	Tool #	Plan Code	Accept Qty	Reject Qty	Reject Number	Insp. Stamp
190		0.00							
Packaging	Packaging								
Packaging	**Memo**	0.00							
Packaging	Identify and stock in kanban rack Location:_____								
200	QC21- Final Inspection - Work Order Release	0.00							
QC	**Memo**	0.00							
Quality Control									

MF
10-12-13

Dart Aerospace Ltd

W/O:		WORK ORDER CHANGES					
DATE	STEP	PROCEDURE CHANGE	By	Date	Qty	Approval Chief Eng / Prod Mgr	Approval QC Inspector

Part No: _____ **PAR #:** _____ **Fault Category:** _____ **NCR:** Yes No **DQA:** _____ **Date:** _____

Resolution: _____ **Disposition:** _____ **QA: N/C Closed:** _____ **Date:** _____

NCR:		WORK ORDER NON-CONFORMANCE (NCR)						
DATE	STEP	Description of NC Section A	Corrective Action Section B			Verification Section C	Approval Chief Eng	Approval QC Inspector
			Initial Chief Eng	Action Description Chief Eng	Sign & Date			

NOTE: Date & initial all entries

Picklist Print

Wednesday, August 18, 2010 4:09:53 PM

Work Order ID: 61344

Parent Item: D350-748-141TRN

Parent Item Name: Crosstube Turning Detail

Start Date: 8/19/2010 **Required Date:** 9/2/2010

Start Qty: 1.00 **Required Qty:** 1.00

Comments:
IPP Rev:A New Issue 08-03-06 DD verified by:ec
IPP Rev B Removed polish 08.04.02 EC verified by : DD
IPP Rev C Remove LPS-3 08.06.23 EC verified by DD

Component Item ID/ Item Name	Replacement Item ID	Mfg/ Purch	Bin Item	Primary Location	Last Location	Route Seq ID	Unit of Measure	Qty on Hand	Qty per Kit	Total Qty	Qty Issued	Date Issued	Status
D6017-115 Crosstube Material		Manufactured	No			110	Each	14.0000	1	1			

Location	Loc Qty	Loc Code
LG	14	
32912	14	

1 mk 10/08/24

Dart Aerospace Ltd

W/O:		WORK ORDER CHANGES					
DATE	STEP	PROCEDURE CHANGE	By	Date	Qty	Approval Chief Eng / Prod Mgr	Approval QC Inspector

Part No: _____ **PAR #:** _____ **Fault Category:** _____ **NCR:** Yes No **DQA:** _____ **Date:** _____

Resolution: _____ **Disposition:** _____ **QA: N/C Closed:** _____ **Date:** _____

NCR:		WORK ORDER NON-CONFORMANCE (NCR)						
DATE	STEP	Description of NC Section A	Corrective Action Section B			Verification Section C	Approval Chief Eng	Approval QC Inspector
			Initial Chief Eng	Action Description Chief Eng	Sign & Date			

NOTE: Date & initial all entries

DART AEROSPACE LTD	Work Order:	61344
Description: Crosstube Assembly (AS350/355 High Fwd)	Part Number:	D350-748-141
Inspection Dwg: D350-748-141 **Rev:** D		Page 1 of 1

FIRST ARTICLE INSPECTION CHECKLIST

[X] First Article [ ] Prototype

	Inspection Sheet Drawing Dimension	Tolerance	Actual Dimension	Accept	Reject	Method of Inspection	Comments
SIDE A	2.240	+0.005/-0.000	2.241	—		Vern	ML-7
	2.180	+0.005/-0.000	2.182	—		"	"
	2.180	+0.005/-0.000	2.185	—		"	"
	2.237	+0.005/-0.000	2.242	—		"	"
	2.272	+0.005/-0.000	2.277	—		"	"
	2.306	+0.005/-0.000	2.311	—		"	"
	2.339	+0.005/-0.000	2.344	—		"	"
	2.339	+0.005/-0.000	2.344	—		"	"
	0.062	+/-0.010	.062	—		R-G	N/A
	4.26	+/-0.030	4.290	—		Vern	ML-7
	R0.063	+/-0.010	R.063	—		R-G	N/A
	R0.50	+/-0.030	R.500	—		R-G	N/A
SIDE B	2.240	+0.005/-0.000	2.241	—		Vern	ML-7
	2.180	+0.005/-0.000	2.181	—		"	"
	2.180	+0.005/-0.000	2.185			"	"
	2.237	+0.005/-0.000	2.242	—		"	"
	2.272	+0.005/-0.000	2.277	—		"	"
	2.306	+0.005/-0.000	2.311	—		"	"
	2.339	+0.005/-0.000	2.344	—		"	"
	2.339	+0.005/-0.000	2.344	—		"	"
	0.062	+/-0.010	.062	—		R-G	N/A
	4.26	+/-0.030	4.290	—		Vern	ML-7
	R0.063	+/-0.010	R.063	—		R-G	N/A
	R0.50	+/-0.030	R.500	—		R-G	N/A
	110.27	+/-0.060	110.295	—		M-tape	AM-01

Measured by:	[signature]	Audited by:	[signature]	Prototype Approval:	N/A
Date:	10/08/25	Date:	10/08/25	Date:	N/A

Rev	Date	Change	Revised by	Approved
A	06.11.09	New Issue (P/O D350-748-101)	KJ/JLM	
B	07.10.24	Dwg Rev updated	KJ/EC/DD	

Dart Aerospace Ltd

W/O:		WORK ORDER CHANGES					
DATE	STEP	PROCEDURE CHANGE	By	Date	Qty	Approval Chief Eng / Prod Mgr	Approval QC Inspector

Part No: _____ **PAR #:** _____ **Fault Category:** _____ **NCR:** Yes No **DQA:** _____ **Date:** _____

Resolution: _____ **Disposition:** _____ **QA: N/C Closed:** _____ **Date:** _____

NCR:		WORK ORDER NON-CONFORMANCE (NCR)						
DATE	STEP	Description of NC Section A	Corrective Action Section B			Verification Section C	Approval Chief Eng	Approval QC Inspector
			Initial Chief Eng	Action Description Chief Eng	Sign & Date			

NOTE: Date & initial all entries

H:\fFORMS\Quality Assurance\approved QA\NCRWO RevE

Item	Qty -141	Part Number	Description
1	X	**D350-748-141**	**CROSSTUBE ASSEMBLY (AS 350/355 HI FWD)**
2	1	D6017-115	CROSSTUBE
3	2	D3502-1	SUPPORT
4	2	D2856-400-710	ABRASION STRIP
5	1	AELS-1032-225	INSERT
6	1	NAS1149D0363J	WASHER (OR AN960JD10)
7	2	MS21920-20	CLAMP (PER DART SPEC. M-MS21920-20)
8	1	MS27039-1-10	SCREW

GENERAL NOTES:

1) MATERIAL: MANUFACTURED FROM D6017-115
   FINISHED LENGTH = 110.270±0.06
2) FINISH: MAGNETIC PARTICLE INSPECT PER DART QSI 038 4.2
   CADMIUM PLATE PER AMS-QQ-P-416B, CLASS 1, TYPE II
   PRIME INSIDE AND OUTSIDE PER DART QSI 005 4.2
   PAINT OUTSIDE PER DART QSI 005 4.2
3) TOLERANCES ARE PER DART QSI 018 UNLESS OTHERWISE NOTED.
4) UNITS: INCHES UNLESS OTHERWISE NOTED.
5) BREAK SHARP EDGES: 0.005 TO 0.010 MAX.
6) IDENTIFICATION: SCRIBE DART PART NUMBER "D350-748-141" AND BATCH NUMBER ON INSIDE OF CUFF USING VIBRATING STYLUS.
7) WEIGHT: 30.45 lbs
8) PART IS SYMMETRIC ABOUT CENTERLINE, EXCEPT FOR Ø0.297 HOLE.
9) BLEND OUT ALL EDGES FROM MACHINING LONGITUDINALY, TRANSITION SHOULD BE SMOOTH. NOTE: ALL HOLES ARE DRILLED AFTER BENDING.
10) BEND PROGRESSIVELY WITH A MINIMUM OF 7 PASSES. MAXIMUM TUBE FLATTENING DUE TO BENDING IS 6% BASED ON O.D.
11) HEAT TREAT TO MIN. 180 KSI PER MIL-T-6736 OR AMS 2759-1C AFTER TURNING.
12) INSTALL D2856-400-710 ABRASION STRIPS WITH A GAP ON BOTTOM SIDE OF CROSSTUBE, CENTERED OPPOSITE D3502-1 SUPPORT, PER QSI 035.
13) EXTREME CARE MUST BE TAKEN TO PROTECT THE OUTSIDE SURFACE OF THE TUBE. THE OUTSIDE SURFACE MUST BE SMOOTH AND FREE FROM SURFACE DEFECTS SUCH AS SCRATCHES, NICKS, OR DENTS. DEFECTS UP TO 0.005" MAY BE BLENDED OUT LONGITUDINALLY. CIRCUMFERENTIAL GRIND MARKS ARE UNACCEPTABLE. WHEN DRILLING HOLES EXTREME CARE MUST BE TAKEN AND CAREFUL DEBURRING PERFORMED TO ENSURE A CLEAN HOLE WITH NO CRACKING/CHIPPING/GROOVES.
14) TORQUE CLAMPS 60 TO 80 IN-LB. ENSURE AT LEAST 1.5 THREADS SHOWING IN SAFETY AND THAT NUT HAS NOT BOTTOMED-OUT AFTER TORQUING.

#61344

RELEASED
2009 -10- 29

REV.	DESCRIPTION	BY	DATE
E	REVISE GENERAL NOTES; UPDATE TO CURRENT ADD STANDARDS; RELOCATED FLAG #6 PER PAR 08-046 (ZN A6-3); TOLERANCES (ZN C6-3, D1-3)	RF	09.09.30
D	MAG. PARTICLE AND CAD PLATE AS MFD.	CP	06.10.31
C	ADD CAD PLATING	CP	06.08.14
B	ADD D6017-115 & PRIME AND PAINT	CP	06.06.30
A	NEW ISSUE	CP	06.03.31

DESIGN		**DART AEROSPACE LTD** HAWKESBURY, ONTARIO, CANADA	
DRAWN	RF		
CHECKED		DRAWING NO.	REV. E
MFG. APPR.		D350-748-141	SHEET 1 OF 4
APPROVED		TITLE	SCALE
DE APPR.		CROSSTUBE (AS 350/355 HI FWD)	NTS
DATE	09.09.30		

COPYRIGHT © 2006 BY DART AEROSPACE LTD
THIS DOCUMENT IS PRIVATE AND CONFIDENTIAL AND IS SUPPLIED ON THE EXPRESS CONDITION THAT IT IS NOT TO BE USED FOR ANY PURPOSE OR COPIED OR COMMUNICATED TO ANY OTHER PERSON WITHOUT WRITTEN PERMISSION FROM DART AEROSPACE LTD.

Dart Aerospace Ltd

W/O:		WORK ORDER CHANGES					
DATE	STEP	PROCEDURE CHANGE	By	Date	Qty	Approval Chief Eng / Prod Mgr	Approval QC Inspector

Part No: _____ **PAR #:** _____ **Fault Category:** _____ **NCR:** Yes No **DQA:** _____ **Date:** _____

Resolution: _____ **Disposition:** _____ **QA: N/C Closed:** _____ **Date:** _____

NCR:		WORK ORDER NON-CONFORMANCE (NCR)						
DATE	STEP	Description of NC Section A	Corrective Action Section B			Verification Section C	Approval Chief Eng	Approval QC Inspector
			Initial Chief Eng	Action Description Chief Eng	Sign & Date			

NOTE: Date & initial all entries

H:\FORMS\Quality Assurance\approved QA\NCRWO RevE

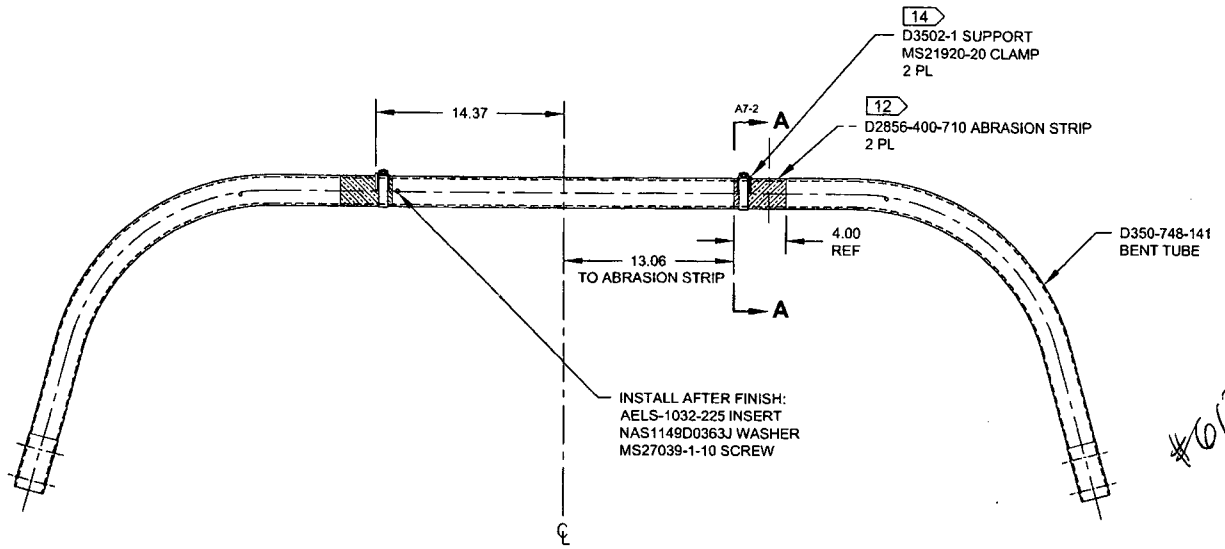

#61324

D350-748-141
ASSEMBLY DETAIL

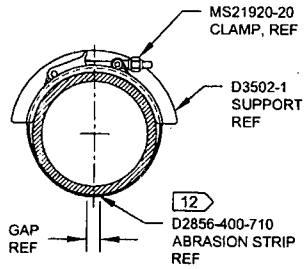

SECTION A-A D4-2
SCALE 4X

RELEASED
2009 -10- 29

DESIGN		**DART AEROSPACE LTD** HAWKESBURY, ONTARIO, CANADA	
DRAWN	RF		
CHECKED		DRAWING NO.	REV. E
MFG. APPR.		D350-748-141	SHEET 2 OF 4
APPROVED		TITLE	SCALE
DE APPR.		CROSSTUBE (AS 350/355 HI FWD)	NTS
DATE	09.09.30		

COPYRIGHT © 2006 BY DART AEROSPACE LTD
THIS DOCUMENT IS PRIVATE AND CONFIDENTIAL AND IS SUPPLIED ON THE EXPRESS CONDITION THAT IT IS NOT TO BE USED FOR ANY PURPOSE, OR COPIED OR COMMUNICATED TO ANY OTHER PERSON WITHOUT WRITTEN PERMISSION FROM DART AEROSPACE LTD.

Dart Aerospace Ltd

W/O:		WORK ORDER CHANGES					
DATE	STEP	PROCEDURE CHANGE	By	Date	Qty	Approval Chief Eng / Prod Mgr	Approval QC Inspector

Part No: _____ **PAR #:** _____ **Fault Category:** _____ **NCR:** Yes No **DQA:** _____ **Date:** _____

Resolution: _____ **Disposition:** _____ **QA: N/C Closed:** _____ **Date:** _____

NCR:		WORK ORDER NON-CONFORMANCE (NCR)						
DATE	STEP	Description of NC Section A	Corrective Action Section B			Verification Section C	Approval Chief Eng	Approval QC Inspector
			Initial Chief Eng	Action Description Chief Eng	Sign & Date			

NOTE: Date & initial all entries

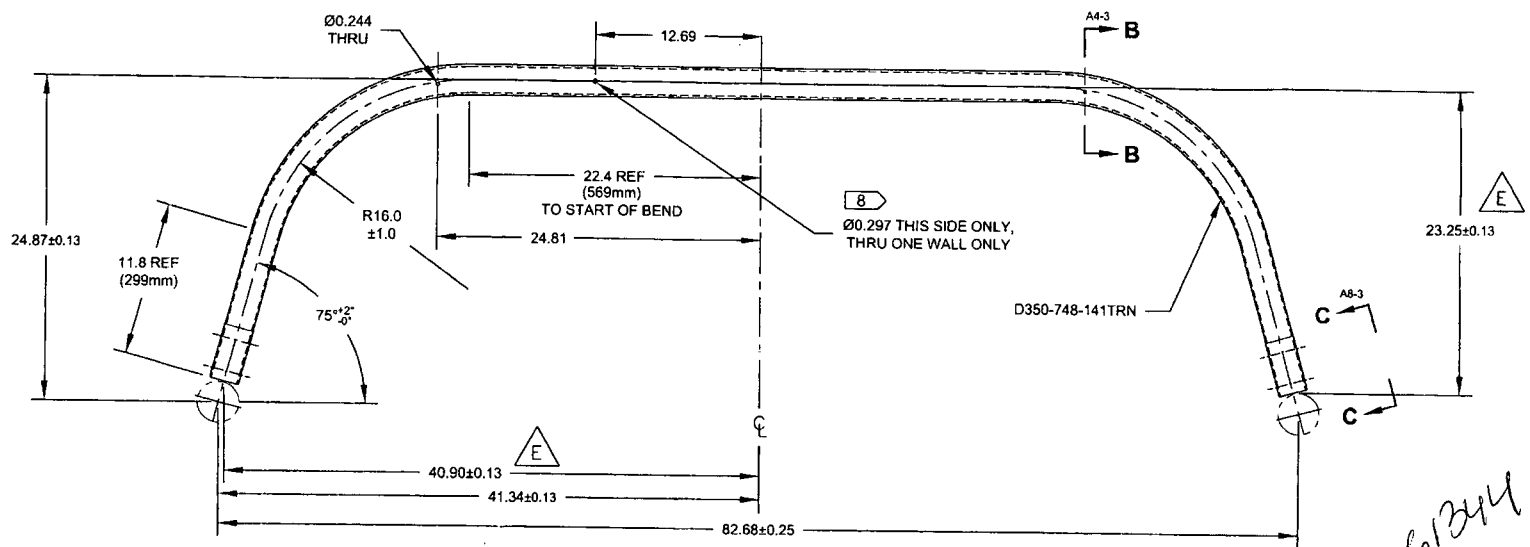

#61344

D350-748-141
BENDING AND DRILLING DETAIL 10

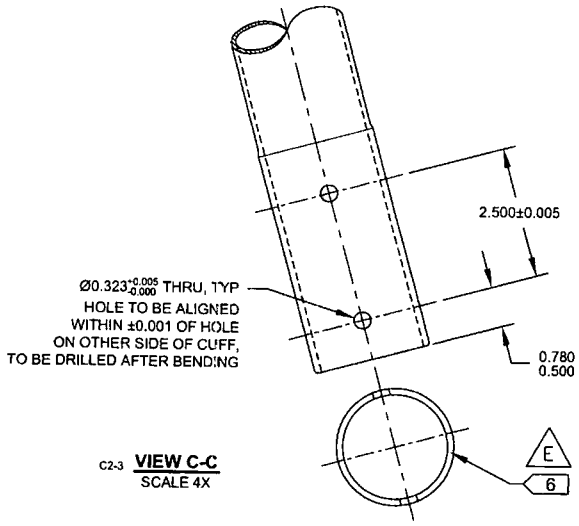

C2-3 **VIEW C-C**
SCALE 4X

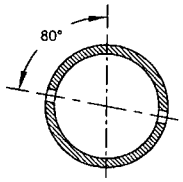

SECTION B-B D3-3
SCALE 4X

RELEASED
2009 -10- 29

DESIGN		**DART AEROSPACE LTD** HAWKESBURY, ONTARIO, CANADA
DRAWN	RF	
CHECKED		DRAWING NO. D350-748-141 — REV. E — SHEET 3 OF 4
MFG. APPR.		
APPROVED		TITLE: CROSSTUBE (AS 350/355 HI FWD) — SCALE: NTS
DE APPR.		
DATE	09.09.30	

COPYRIGHT © 2006 BY DART AEROSPACE LTD
THIS DOCUMENT IS PRIVATE AND CONFIDENTIAL AND IS SUPPLIED ON THE EXPRESS CONDITION THAT IT IS NOT TO BE USED FOR ANY PURPOSE OR COPIED OR COMMUNICATED TO ANY OTHER PERSON WITHOUT WRITTEN PERMISSION FROM DART AEROSPACE LTD.

Dart Aerospace Ltd

W/O:		WORK ORDER CHANGES					
DATE	STEP	PROCEDURE CHANGE	By	Date	Qty	Approval Chief Eng / Prod Mgr	Approval QC Inspector

Part No: _____ PAR #: _____ Fault Category: _____ NCR: Yes No DQA: _____ Date: _____

Resolution: _____ Disposition: _____ QA: N/C Closed: _____ Date: _____

NCR:		WORK ORDER NON-CONFORMANCE (NCR)						
DATE	STEP	Description of NC Section A	Corrective Action Section B			Verification Section C	Approval Chief Eng	Approval QC Inspector
			Initial Chief Eng	Action Description Chief Eng	Sign & Date			

NOTE: Date & initial all entries

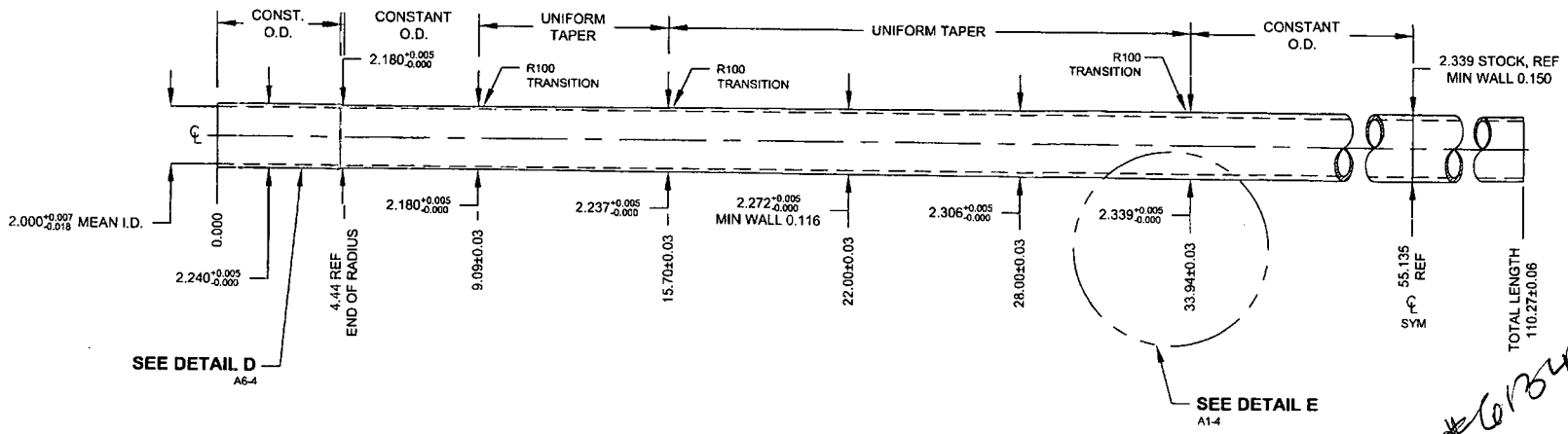

#61344

D350-748-141TRN
TURNING DETAIL

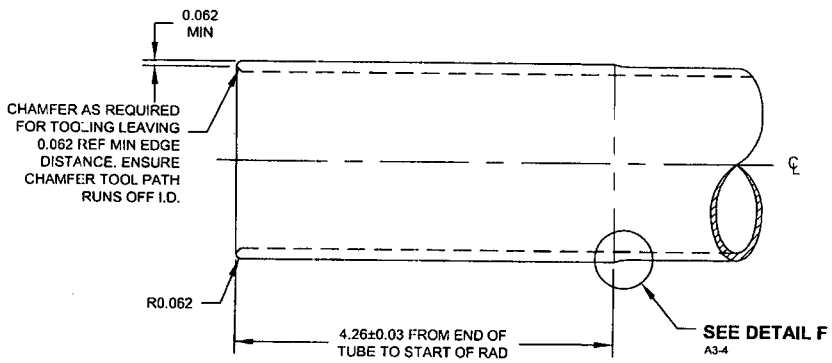

DETAIL D:
CROSSTUBE CUFF C7-4
SCALE 3X

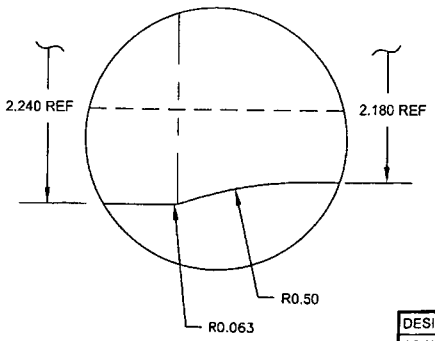

DETAIL F:
CUFF TRANSITION A5-4
NOT TO SCALE

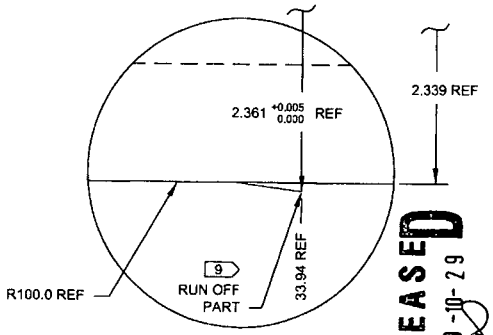

DETAIL E:
TAPER RUN-OFF C3-4
NOT TO SCALE

RELEASED
2009-10-29

DESIGN		**DART AEROSPACE LTD** HAWKESBURY, ONTARIO, CANADA
DRAWN	RF	
CHECKED		DRAWING NO. D350-748-141 — REV. E — SHEET 4 OF 4
MFG. APPR.		
APPROVED		TITLE: CROSSTUBE (AS 350/355 HI FWD) — SCALE: NTS
DE APPR.		
DATE	09.09.30	

COPYRIGHT © 2006 BY DART AEROSPACE LTD
THIS DOCUMENT IS PRIVATE AND CONFIDENTIAL AND IS SUPPLIED ON THE EXPRESS CONDITION THAT IT IS NOT TO BE USED FOR ANY PURPOSE OR COPIED OR COMMUNICATED TO ANY OTHER PERSON WITHOUT WRITTEN PERMISSION FROM DART AEROSPACE LTD.

Dart Aerospace Ltd

W/O:		WORK ORDER CHANGES					
DATE	STEP	PROCEDURE CHANGE	By	Date	Qty	Approval Chief Eng / Prod Mgr	Approval QC Inspector

Part No: _____ **PAR #:** _____ **Fault Category:** _____ **NCR:** Yes No **DQA:** _____ **Date:** _____

Resolution: _____ **Disposition:** _____ **QA: N/C Closed:** _____ **Date:** _____

NCR:		WORK ORDER NON-CONFORMANCE (NCR)						
DATE	STEP	Description of NC Section A	Corrective Action Section B			Verification Section C	Approval Chief Eng	Approval QC Inspector
			Initial Chief Eng	Action Description Chief Eng	Sign & Date			

NOTE: Date & initial all entries